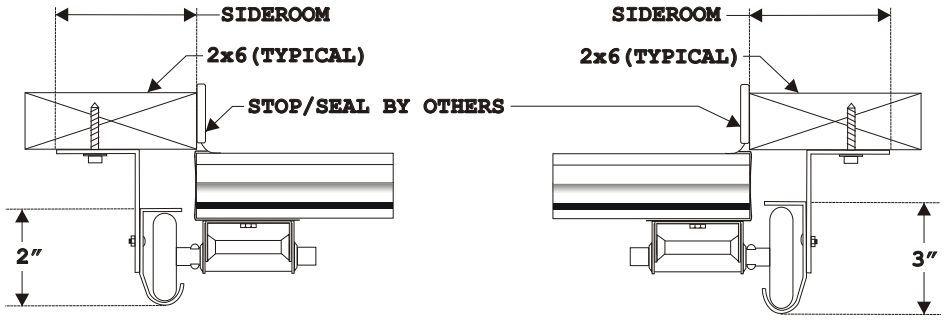

2″ TRACK, MANUAL LIFT
SIDEROOM REQUIRED = 4.5″

3″ TRACK, MANUAL LIFT
SIDEROOM REQUIRED = 5.5″

WOOD JAMB DETAILS

STEEL JAMB DETAILS

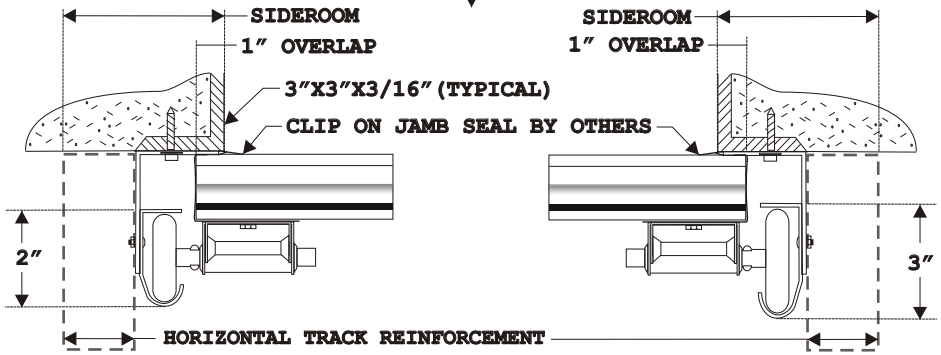

2″ TRACK, MANUAL LIFT
SIDEROOM REQUIRED = 4″

3″ TRACK, MANUAL LIFT
SIDEROOM REQUIRED = 5″

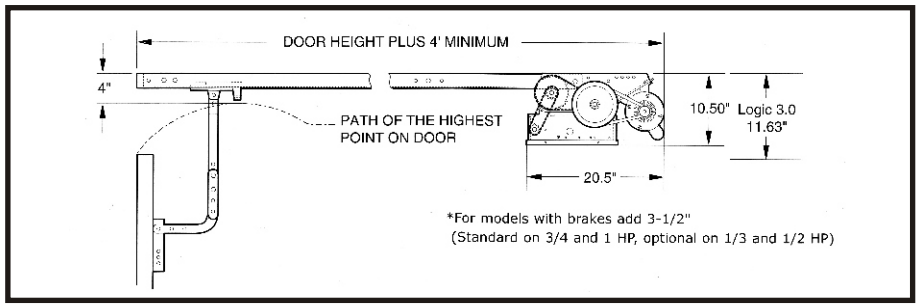

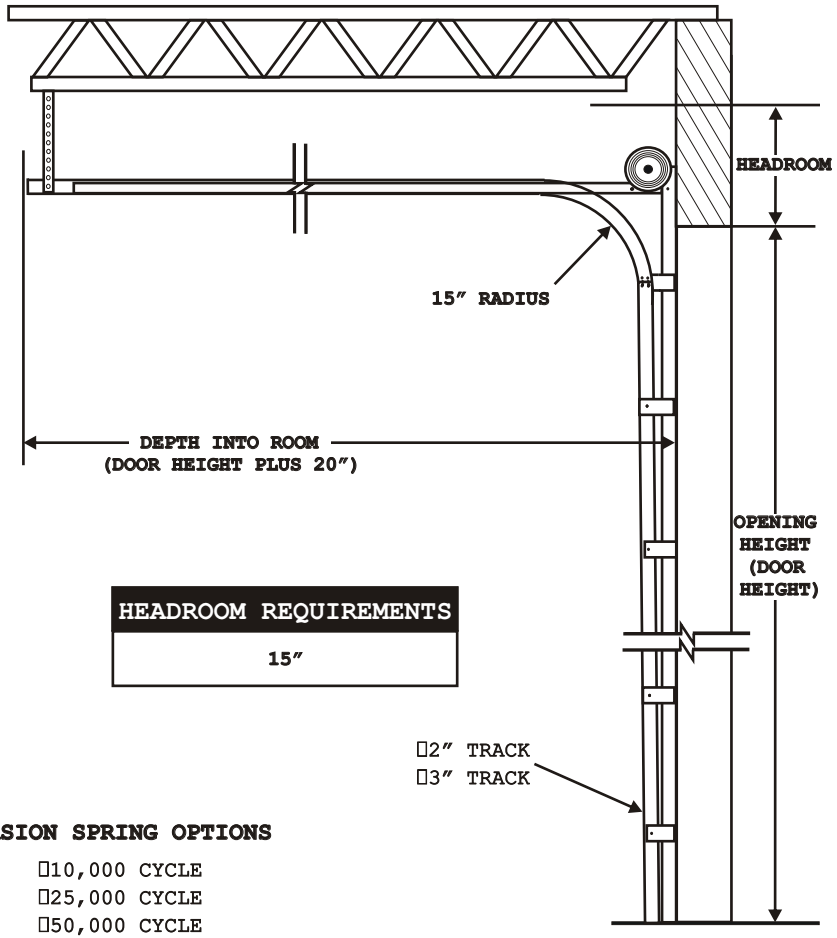

HEADROOM REQUIREMENTS

15″

TORSION SPRING OPTIONS

- ☐10,000 CYCLE
- ☐25,000 CYCLE
- ☐50,000 CYCLE
- ☐100,00 CYCLE

GENERAL DOORS Corporation
1 Monroe Street · PO Box 205 · Bristol, PA 19007-0205
215.788.9277 · Fax 215.788.9450

SECTION 08360/SECTIONAL DOORS **STANDARD LIFT TRACK DETAILS**

DISTRIBUTOR:
JOB:
CONTRACTOR:
ARCHITECT:

DOOR NUMBER	QTY	DOOR WIDTH	DOOR HEIGHT	TUBE OR SOLID SHAFT	OPERATION	SIDEROOM	HEADROOM	JAMBS	DEPTH INTO ROOM

DATE:
SHEET ___ OF ___
DRAWN BY: JTL