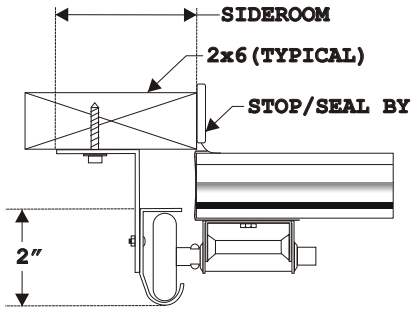

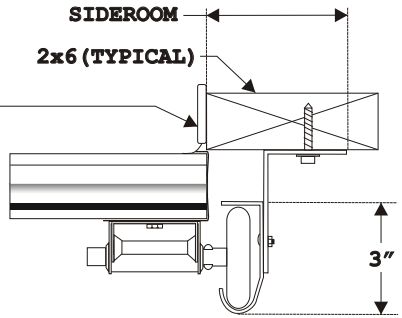

2″ TRACK, MANUAL LIFT
SIDEROOM REQUIRED = 6″

3″ TRACK, MANUAL LIFT
SIDEROOM REQUIRED = 7″

WOOD JAMB DETAILS

STEEL JAMB DETAILS

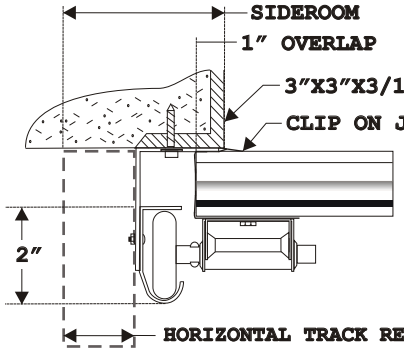

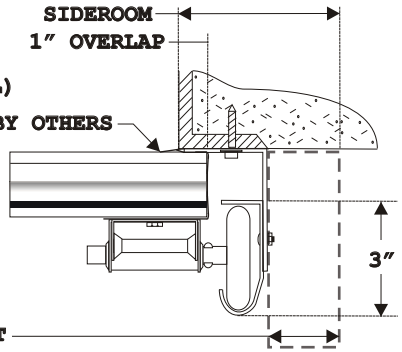

2″ TRACK, MANUAL LIFT
SIDEROOM REQUIRED = 6″

3″ TRACK, MANUAL LIFT
SIDEROOM REQUIRED = 7″

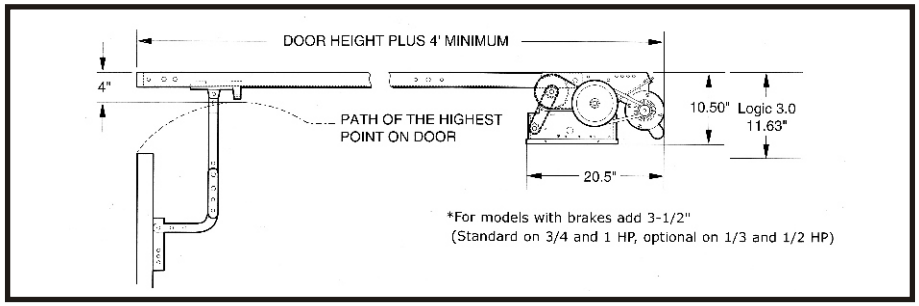

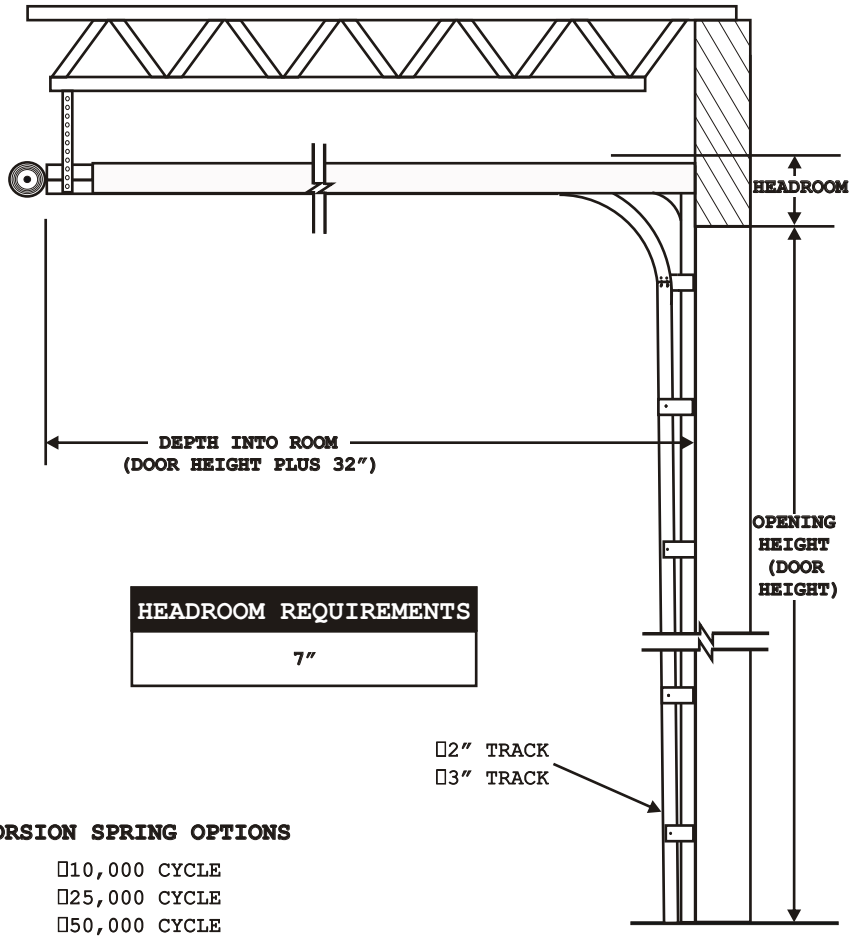

HEADROOM REQUIREMENTS

7″

TORSION SPRING OPTIONS

- 10,000 CYCLE
- 25,000 CYCLE
- 50,000 CYCLE
- 100,00 CYCLE

GENERAL DOORS Corporation
1 Monroe Street · PO Box 205 · Bristol, PA 19007-0205
215.788.9277 · Fax 215.788.9450

SECTION 08360/SECTIONAL DOORS **LOW HEADROOM TRACK DETAILS**

DISTRIBUTOR:
JOB:
CONTRACTOR:
ARCHITECT:

DOOR NUMBER	QTY	DOOR WIDTH	DOOR HEIGHT	TUBE OR SOLID SHAFT	OPERATION	SIDEROOM	HEADROOM	JAMBS	DEPTH INTO ROOM

DATE:
SHEET ___ OF ___
DRAWN BY: JTL